Catalog No.: _____
Job/Title: _____

G692

G-BOX 3-Gang Masonry Box with CKO

Description

3-Gang Masonry Box
with CKO

Features

- 5-1/2" Width x 3-3/4" Height
- 2-1/2" Depth
- 47.9 Cubic Inches

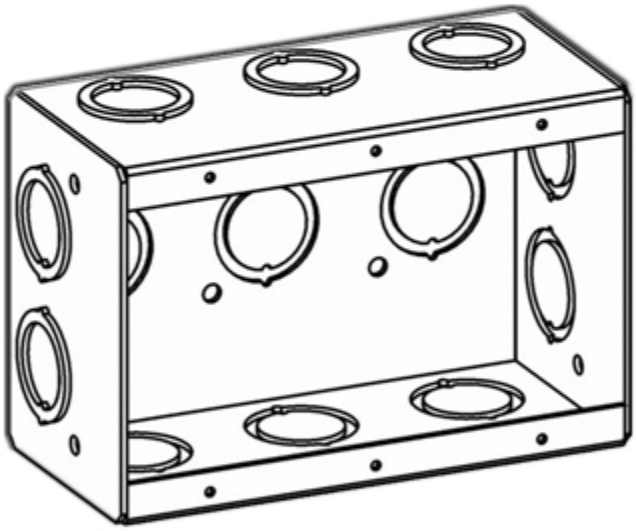

Specifications

- 16 GA Sheet Steel
- KO Sides : (4) - CKO
- KO Ends : (6) - CKO
- KO Bottom : (3) - CKO
- Galvanized

G-BOX Inc.
6315 Traffic Avenue, Ridgewood, NY 11385 | 718.257.2111

c UL us LISTED